TECHNICAL DATA SHEET

ROXOR

Sales Code: ATH073G

Description: 500 Wh Single Drawer Vanity & Basin 4

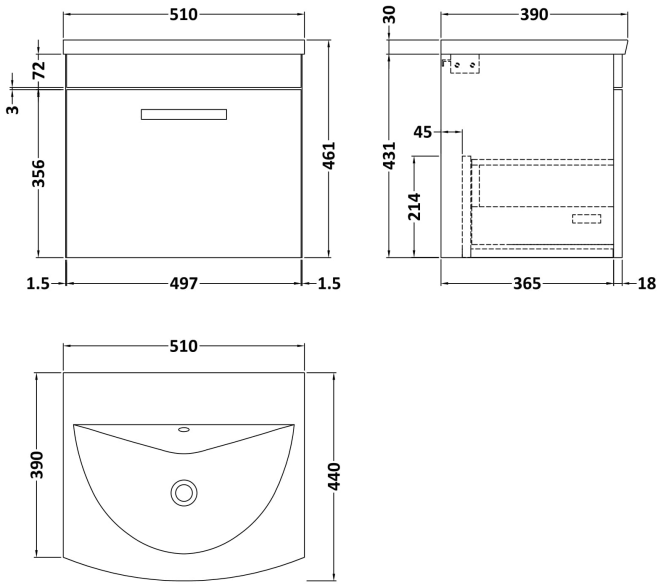

Packaging Details

Barcode: 5056462621425

TECHNICAL DATA SHEET

ROXOR

FURNITURE

Sales Code: MOC382

Description: 500 Wall Hung Single Drawer Basin Unit

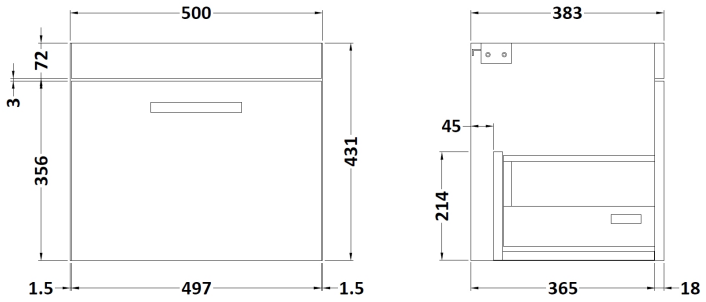

Product Dimensions	
Height (mm):	430
Width (mm):	500
Depth (mm):	383
Nett Weight (kg):	12
Packaging Dimensions	
Height (mm):	450
Width (mm):	520
Depth (mm):	405
Gross Weight (kg):	12.5
Packaging Data	
Box Colour:	Brown Cardboard Box
Box Qty:	1
Label Size:	100 x 50
Label Colour:	White Label
Label Qty:	2
Outer Box Dimensions (If Applicable)	
Height (mm):	
Width (mm):	
Depth (mm):	
Gross Weight (kg):	
Barcode:	5055275869956
Product Details	
Country of Origin:	China
Fitting Instruction:	No
CE & UKCA:	N/A
FSC Certified Materials:	Yes
Colour:	Gloss Grey
Construction Method:	Cam & Wood Dowel
Construction Type:	Rigid
Cabinet Finish:	MFC Painted Gloss
Fascia Finish:	Mdf Painted Gloss
Cabinet Thickness (mm):	16
Fascia Thickness (mm):	18
Drawer Included:	Yes
Drawer Type:	80mm High Metal Softclose
No of Shelves:	0
Hinge Type:	Not Applicable
Hinge Included:	Not Applicable
Adjustable Legs:	No, Not Required
Fixings Included:	Yes
Handle Style:	Contemporary
Waste Shroud:	Yes
Handle Included:	Yes, Supplied
Handle Type:	Strap

TECHNICAL DATA SHEET

ROXOR

CERAMICS

Sales Code: NVM042

Description: 500 Curved Basin 1Th

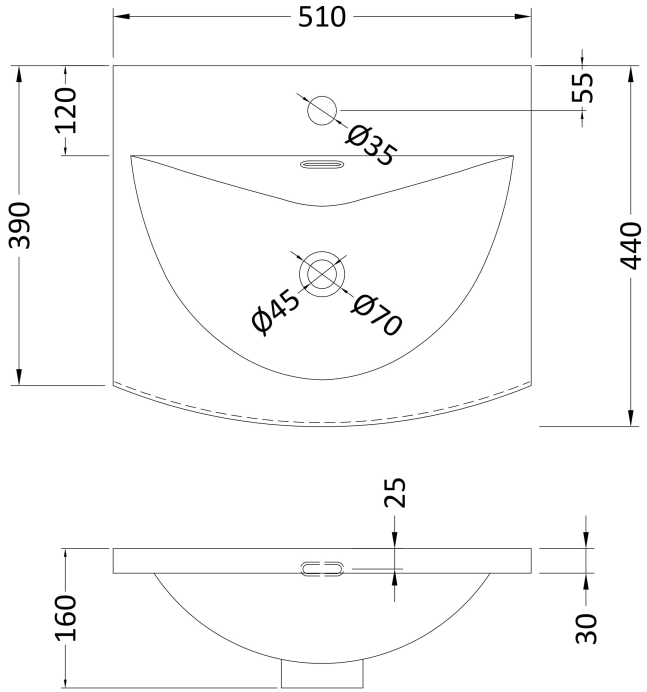

Product Dimensions	
Height (mm):	160
Width (mm):	510
Depth (mm):	440
Nett Weight (kg):	9
Packaging Dimensions	
Height (mm):	190
Width (mm):	530
Depth (mm):	415
Gross Weight (kg):	9.5
Packaging Data	
Box Colour:	Brown Cardboard Box - Printed
Box Qty:	1
Label Size:	100 x 50
Label Colour:	White Label
Label Qty:	2
Outer Box Dimensions (If Applicable)	
Height (mm):	
Width (mm):	
Depth (mm):	
Gross Weight (kg):	
Barcode:	5056462620985
Product Details	
Country of Origin:	China
Fitting Instruction:	No
Certification: CE & UKCA: No	WRAS: N/A WRAS No: N/A
Product Material:	Vitreous China
Fixing Supplied:	No

Pans/Bidets: Trap Style: Not Applicable Includes Seat: Not Applicable

Seats: Seat Type: Not Applicable Material: Not Applicable
Function: Not Applicable Hinge Type: Not Applicable
Hinge Material: Not Applicable

Cisterns: Operating Type: Not Applicable Fittings: Not Applicable
Lever Type: Not Applicable

Basins: Tap Hole: One Taphole Chain Stay Hole: No
Template: Not Required Waste Type Req: Slotted
Overflow Inc: Yes Overflow Cover: Yes
Inner Bowl Depth (mm): 125mm