TECHNICAL DATA SHEET

ROXOR

Sales Code: ATH107F

Description: 1200 Fs 4-Door Vanity & Double Basin

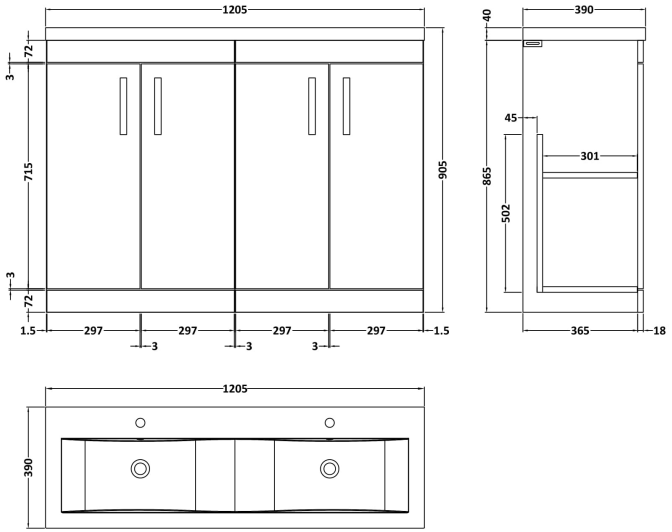

Packaging Details

Barcode: 5056211888895

Sales Code: MOE403

Description: 600 Floor Standing 2-Door Basin Unit

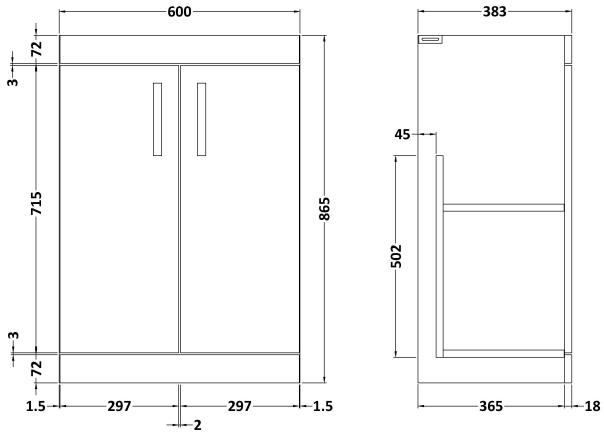

Product Dimensions	
Height (mm):	865
Width (mm):	600
Depth (mm):	383
Nett Weight (kg):	21
Packaging Dimensions	
Height (mm):	405
Width (mm):	620
Depth (mm):	885
Gross Weight (kg):	21.5
Packaging Data	
Box Colour:	Brown Cardboard Box
Box Qty:	1
Label Size:	100 x 50
Label Colour:	White Label
Label Qty:	2
Outer Box Dimensions (If Applicable)	
Height (mm):	
Width (mm):	
Depth (mm):	
Gross Weight (kg):	
Barcode:	5056211847922
Product Details	
Country of Origin:	China
Fitting Instruction:	No
CE & UKCA:	N/A
FSC Certified Materials:	Yes
Colour:	Gloss Grey Mist
Construction Method:	Cam & Wood Dowel
Construction Type:	Rigid
Cabinet Finish:	MFC Painted Gloss
Fascia Finish:	Mdf Painted Gloss
Cabinet Thickness (mm):	16
Fascia Thickness (mm):	18
Drawer Included:	No
Drawer Type:	Not Applicable
No of Shelves:	1
Hinge Type:	95 Degree Clip-On Soft Close
Hinge Included:	Yes, Supplied
Adjustable Legs:	No, Not Required
Fixings Included:	Yes
Handle Style:	Contemporary
Waste Shroud:	No
Handle Included:	Yes, Supplied
Handle Type:	Strap

TECHNICAL DATA SHEET

ROXOR

CERAMICS

Sales Code: CBM424

Description: Double Ceramic Basin 1208X392

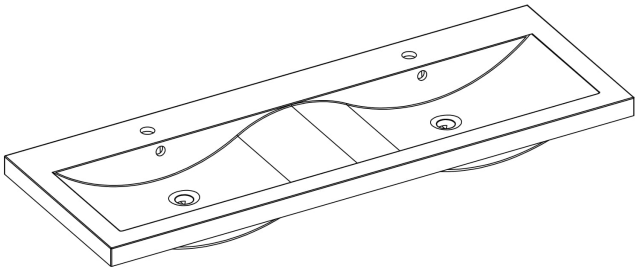

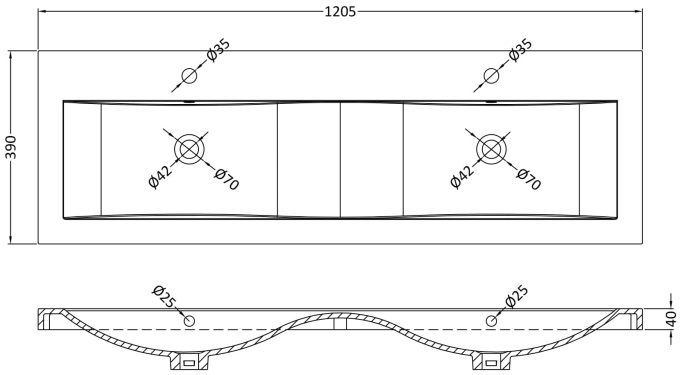

Product Dimensions	
Height (mm):	390
Width (mm):	1205
Depth (mm):	175
Nett Weight (kg):	27
Packaging Dimensions	
Height (mm):	205
Width (mm):	1270
Depth (mm):	510
Gross Weight (kg):	27
Packaging Data	
Box Colour:	Brown Cardboard Box - Printed
Box Qty:	1
Label Size:	100 x 50
Label Colour:	White Label
Label Qty:	2
Outer Box Dimensions (If Applicable)	
Height (mm):	
Width (mm):	
Depth (mm):	
Gross Weight (kg):	
Barcode:	5056211875826
Product Details	
Country of Origin:	China
Fitting Instruction:	No
Certification: CE & UKCA: No	WRAS: N/A WRAS No: N/A
Product Material:	Vitreous China
Fixing Supplied:	No

Pans/Bidets: Trap Style: Not Applicable Includes Seat: Not Applicable

Seats: Seat Type: Not Applicable Material: Not Applicable
Function: Not Applicable Hinge Type: Not Applicable
Hinge Material: Not Applicable

Cisterns: Operating Type: Not Applicable Fittings: Not Applicable
Lever Type: Not Applicable

Basins: Tap Hole: Two Tapholes Chain Stay Hole: No
Template: Not Required Waste Type Req: Slotted
Overflow Inc: Yes Overflow Cover: Yes
Inner Bowl Depth (mm): 103 mm