TECHNICAL DATA SHEET

ROXOR

Sales Code: Clb502

Description: Classique 500 1Th Basin With Lux Stand

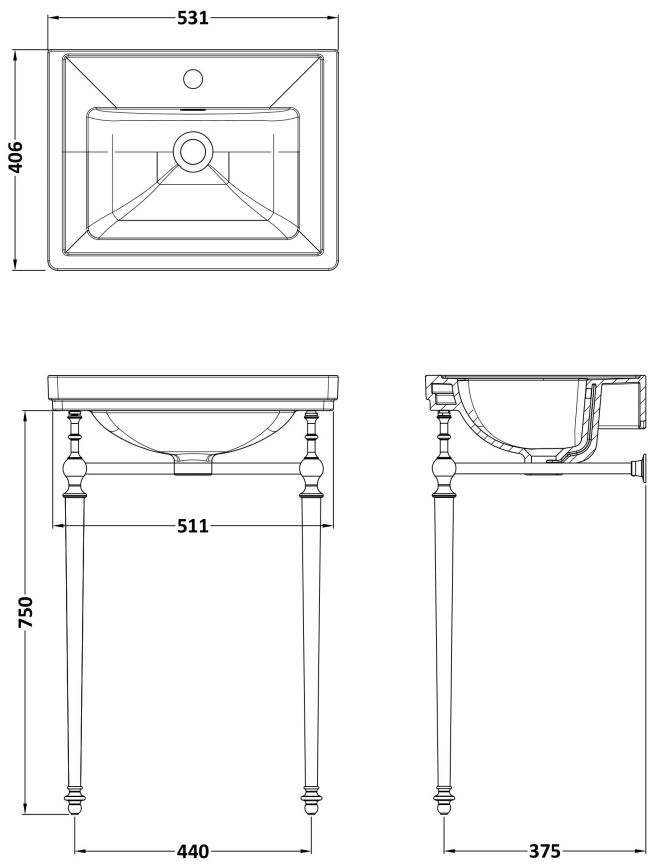

Packaging Details

Barcode: 5056678444931

Sales Code: NLA002

Description: Traditional Basin Stand

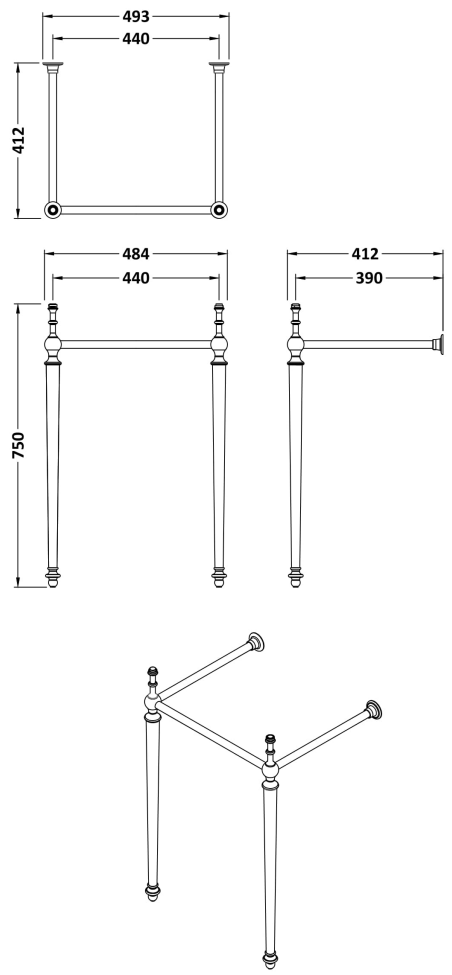

Product Dimensions	
Length (mm):	
Width (mm):	493
Height (mm):	750
Depth (mm):	442
Nett Weight (kg):	3.58
Packaging Dimensions	
Height (mm):	600
Width (mm):	295
Depth (mm):	90
Gross Weight (kg):	3.95
Packaging Data	
Box Colour:	Brown Cardboard Box
Box Qty:	1
Label Size:	100 x 50
Label Colour:	White Label
Label Qty:	2
Outer Box Dimensions (If Applicable)	
Height (mm):	
Width (mm):	
Length (mm):	
Depth (mm):	
Gross Weight (kg):	
Barcode:	5056211868675
Product Details	
Country of Origin:	China
Fitting Instruction:	No
CE & UKCA:	N/A
Product Material:	Stainless Steel
Heating Element Wattage:	Not Applicable
Colour/Finish:	Chrome
Product Diameter:	N/A
Connection Size:	Not Applicable

Sales Code: EA370

Description: Basin Bottle Trap

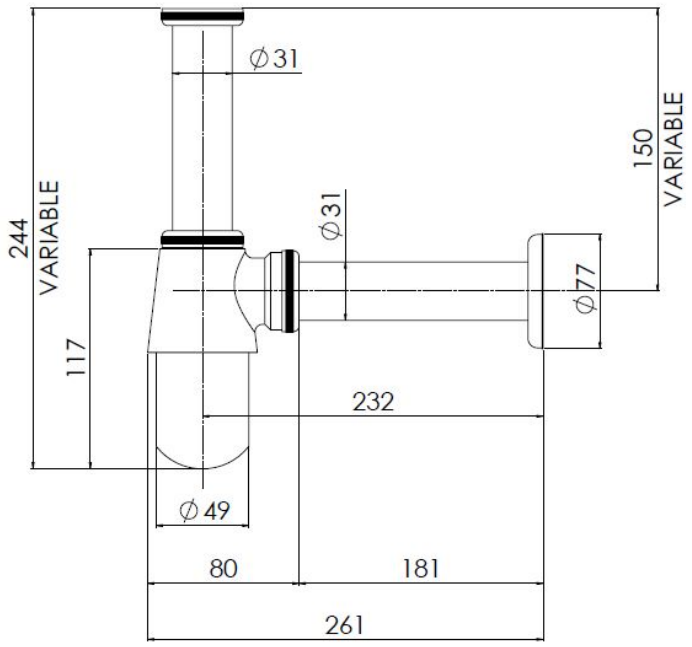

Product Dimensions	
Length (mm):	
Width (mm):	361
Height (mm):	240
Depth (mm):	45
Nett Weight (kg):	0.66
Packaging Dimensions	
Height (mm):	200
Width (mm):	110
Depth (mm):	85
Gross Weight (kg):	0.66
Packaging Data	
Box Colour:	White Cardboard Box
Box Qty:	1
Label Size:	100 x 50
Label Colour:	White Label
Label Qty:	2
Outer Box Dimensions (If Applicable)	
Height (mm):	
Width (mm):	
Length (mm):	
Depth (mm):	
Gross Weight (kg):	20
Barcode:	5055146103998
Product Details	
Country of Origin:	China
Fitting Instruction:	No
CE & UKCA:	N/A
Product Material:	Brass
Heating Element Wattage:	Not Applicable
Colour/Finish:	Chrome
Product Diameter:	73mm
Connection Size:	11/4"

TECHNICAL DATA SHEET

ROXOR

CERAMICS

Sales Code: CBM502

Description: 500 Classique Basin 1Th

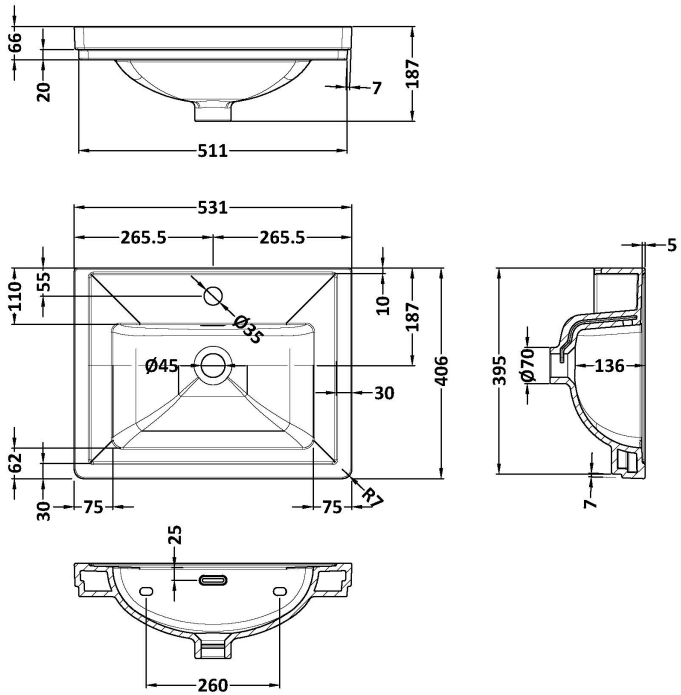

Product Dimensions	
Height (mm):	187
Width (mm):	531
Depth (mm):	406
Nett Weight (kg):	13.5
Packaging Dimensions	
Height (mm):	430
Width (mm):	550
Depth (mm):	220
Gross Weight (kg):	13.5
Packaging Data	
Box Colour:	Brown Cardboard Box - Printed
Box Qty:	1
Label Size:	100 x 50
Label Colour:	White Label
Label Qty:	2
Outer Box Dimensions (If Applicable)	
Height (mm):	
Width (mm):	
Depth (mm):	
Gross Weight (kg):	
Barcode:	5056462643632
Product Details	
Country of Origin:	Utd.Arab.Emir.
Fitting Instruction:	No
Certification: CE & UKCA: No	WRAS: N/A WRAS No: N/A
Product Material:	Fireclay
Fixing Supplied:	No

Pans/Bidets: Trap Style: N/A Includes Seat: Not Applicable

Seats: Seat Type: N/A Material: Not Applicable
Function: Not Applicable Hinge Type: Not Applicable
Hinge Material: Not Applicable

Cisterns: Operating Type: Not Applicable Fittings: Not Applicable
Lever Type: Not Applicable

Basins: Tap Hole: One Taphole Chain Stay Hole: No
Template: Not Required Waste Type Req: Slotted
Overflow Inc: Yes Overflow Cover: Yes
Inner Bowl Depth (mm): 136 mm