TECHNICAL DATA SHEET

ROXOR

Sales Code: CLC825A

Description: 600 F/S 2-Door Unit & Basin 1Th

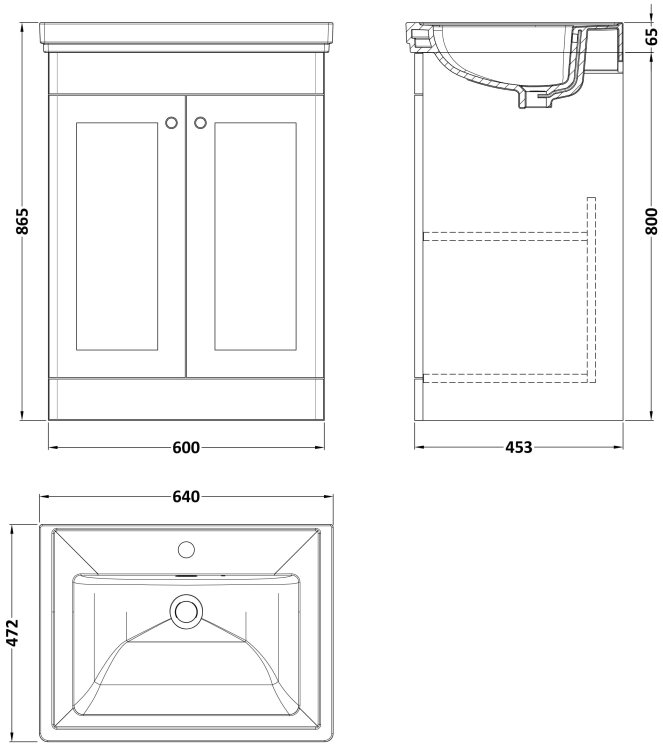

Packaging Details

Barcode: 5056462685717

TECHNICAL DATA SHEET

ROXOR

FURNITURE

Sales Code: CLA825

Description: 600 F/S 2-Door Unit (800X600x453)

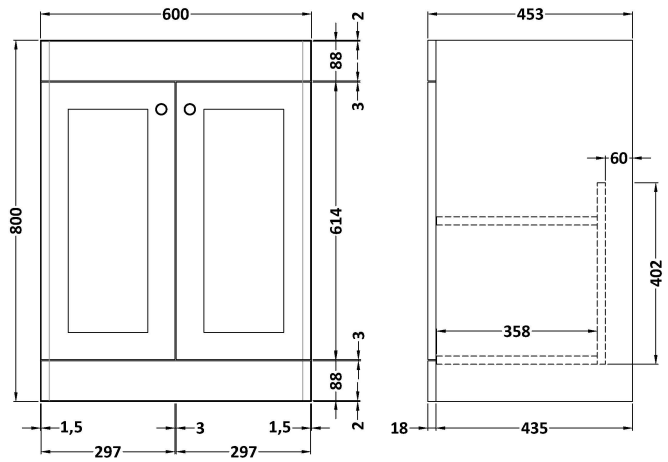

Product Dimensions	
Height (mm):	800
Width (mm):	600
Depth (mm):	453
Nett Weight (kg):	25.3
Packaging Dimensions	
Height (mm):	835
Width (mm):	625
Depth (mm):	480
Gross Weight (kg):	25.8
Packaging Data	
Box Colour:	Brown Cardboard Box
Box Qty:	1
Label Size:	100 x 50
Label Colour:	White Label
Label Qty:	2
Outer Box Dimensions (If Applicable)	
Height (mm):	
Width (mm):	
Depth (mm):	
Gross Weight (kg):	
Barcode:	5056462643168
Product Details	
Country of Origin:	China
Fitting Instruction:	No
CE & UKCA:	N/A
FSC Certified Materials:	Yes
Colour:	Satin Green
Construction Method:	Cam & Wood Dowel
Construction Type:	Rigid
Cabinet Finish:	MFC Painted Matt
Fascia Finish:	Mdf Painted Matt
Cabinet Thickness (mm):	18
Fascia Thickness (mm):	18
Drawer Included:	No
Drawer Type:	Not Applicable
No of Shelves:	1
Hinge Type:	95 Degree Clip-On Soft Close
Hinge Included:	Yes, Supplied
Adjustable Legs:	No, Not Required
Fixings Included:	Yes
Handle Style:	Traditional
Waste Shroud:	Not Applicable
Handle Included:	Yes, Supplied
Handle Type:	Knob

TECHNICAL DATA SHEET

ROXOR

CERAMICS

Sales Code: CBM503

Description: 600 Classic Basin (640X472x185) 1Th

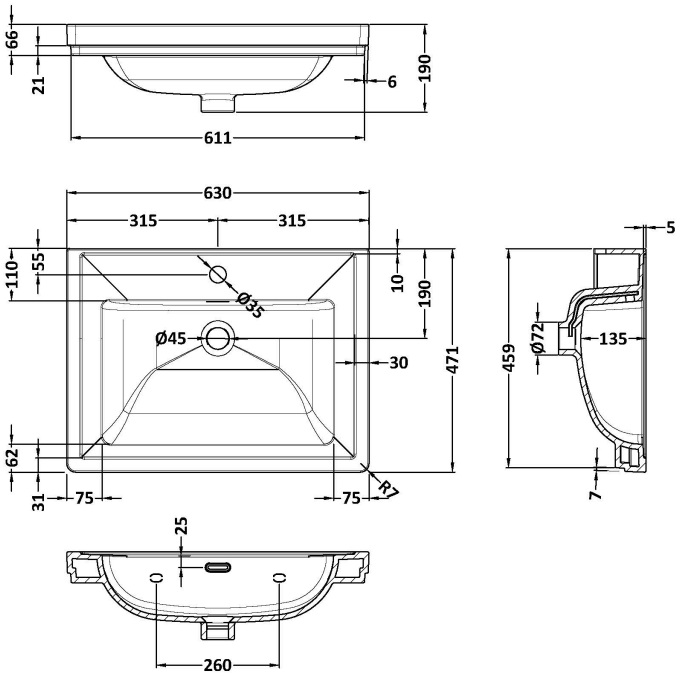

Product Dimensions	
Height (mm):	190
Width (mm):	630
Depth (mm):	471
Nett Weight (kg):	17
Packaging Dimensions	
Height (mm):	490
Width (mm):	650
Depth (mm):	220
Gross Weight (kg):	17.3
Packaging Data	
Box Colour:	Brown Cardboard Box - Printed
Box Qty:	1
Label Size:	100 x 50
Label Colour:	White Label
Label Qty:	2
Outer Box Dimensions (If Applicable)	
Height (mm):	
Width (mm):	
Depth (mm):	
Gross Weight (kg):	
Barcode:	5056462643656
Product Details	
Country of Origin:	Utd.Arab.Emir.
Fitting Instruction:	No
Certification: CE & UKCA: No	WRAS: N/A WRAS No: N/A
Product Material:	Fireclay
Fixing Supplied:	No

Pans/Bidets: Trap Style: N/A Includes Seat: Not Applicable

Seats: Seat Type: N/A Material: Not Applicable
Function: Not Applicable Hinge Type: Not Applicable
Hinge Material: Not Applicable

Cisterns: Operating Type: Not Applicable Fittings: Not Applicable
Lever Type: Not Applicable

Basins: Tap Hole: One Taphole Chain Stay Hole: No
Template: Not Required Waste Type Req: Slotted
Overflow Inc: Yes Overflow Cover: Yes
Inner Bowl Depth (mm): 135 mm