TECHNICAL DATA SHEET

ROXOR

Sales Code: DPF294W2

Description: 1200 W/H 2-Drawer Vanity & Worktop

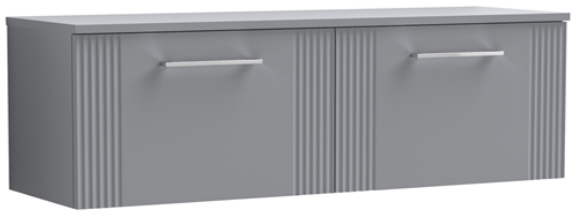

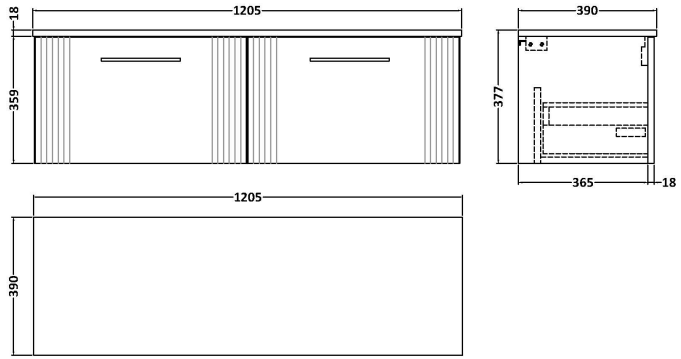

Packaging Details

Barcode: 5056462676814

TECHNICAL DATA SHEET

ROXOR

FURNITURE

Sales Code: FLT294

Description: 600 W/H Single Drawer Unit

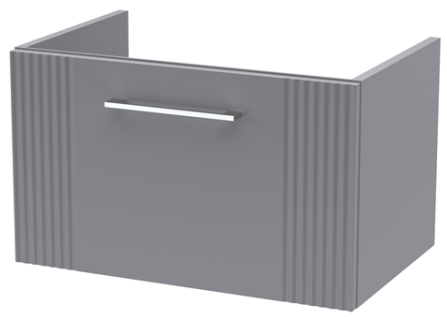

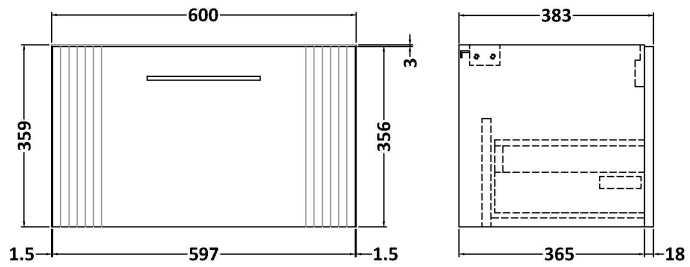

Product Dimensions	
Height (mm):	359
Width (mm):	600
Depth (mm):	383
Nett Weight (kg):	13
Packaging Dimensions	
Height (mm):	380
Width (mm):	620
Depth (mm):	405
Gross Weight (kg):	13.5
Packaging Data	
Box Colour:	Brown Cardboard Box - Printed
Box Qty:	0
Label Size:	0 x 0
Label Colour:	Not Applicable
Label Qty:	0
Outer Box Dimensions (If Applicable)	
Height (mm):	
Width (mm):	
Depth (mm):	
Gross Weight (kg):	
Barcode:	5056462655451
Product Details	
Country of Origin:	China
Fitting Instruction:	No
CE & UKCA:	
FSC Certified Materials:	Yes
Colour:	Satin Grey
Construction Method:	Cam & Wood Dowel
Construction Type:	Rigid
Cabinet Finish:	MFC Painted Gloss
Fascia Finish:	Mdf Painted Gloss
Cabinet Thickness (mm):	16
Fascia Thickness (mm):	18
Drawer Included:	Yes
Drawer Type:	80mm High Metal S/C Inc Galler
No of Shelves:	0
Hinge Type:	Not Applicable
Hinge Included:	No
Adjustable Legs:	No, Not Required
Fixings Included:	Yes
Handle Style:	Modern
Waste Shroud:	Yes
Handle Included:	Yes, Supplied
Handle Type:	Finger Pull

TECHNICAL DATA SHEET

ROXOR

FURNITURE

Sales Code: MWT220

Description: 1200 Worktop (1205X390x18mm)

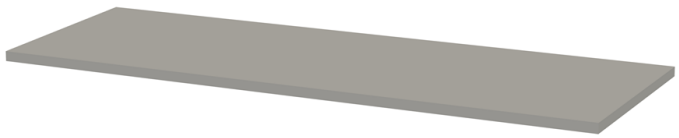

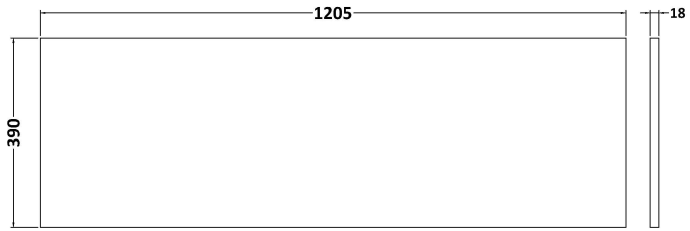

Product Dimensions	
Height (mm):	18
Width (mm):	1205
Depth (mm):	390
Nett Weight (kg):	5
Packaging Dimensions	
Height (mm):	25
Width (mm):	1225
Depth (mm):	410
Gross Weight (kg):	5
Packaging Data	
Box Colour:	Brown Cardboard Box - Printed
Box Qty:	1
Label Size:	100 x 50
Label Colour:	Not Applicable
Label Qty:	0
Outer Box Dimensions (If Applicable)	
Height (mm):	
Width (mm):	
Depth (mm):	
Gross Weight (kg):	
Barcode:	5056462654973
Product Details	
Country of Origin:	China
Fitting Instruction:	No
CE & UKCA:	N/A
FSC Certified Materials:	Yes
Colour:	Satin Grey
Construction Method:	Not Applicable
Construction Type:	Not Applicable
Cabinet Finish:	Not Applicable
Fascia Finish:	MFC Painted Gloss
Cabinet Thickness (mm):	
Fascia Thickness (mm):	18
Drawer Included:	Not Applicable
Drawer Type:	Not Applicable
No of Shelves:	Not Applicable
Hinge Type:	Not Applicable
Hinge Included:	Not Applicable
Adjustable Legs:	Not Applicable
Fixings Included:	Yes
Handle Style:	Not Applicable
Waste Shroud:	Not Applicable
Handle Included:	Not Applicable
Handle Type:	Not Applicable