TECHNICAL DATA SHEET

ROXOR

Sales Code: FPA402A

Description: Parade 600 W/H 2 Drawer Unit & Basin

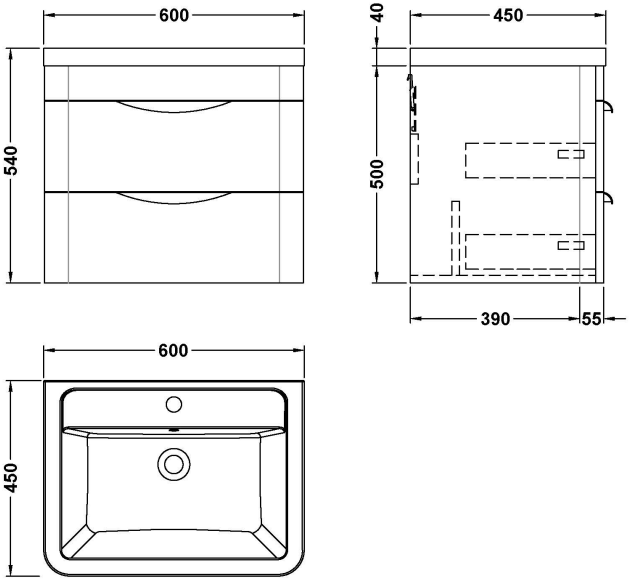

Packaging Details

Barcode: 5056211888482

Sales Code: CBM003

Description: Ceramic Basin 600X450

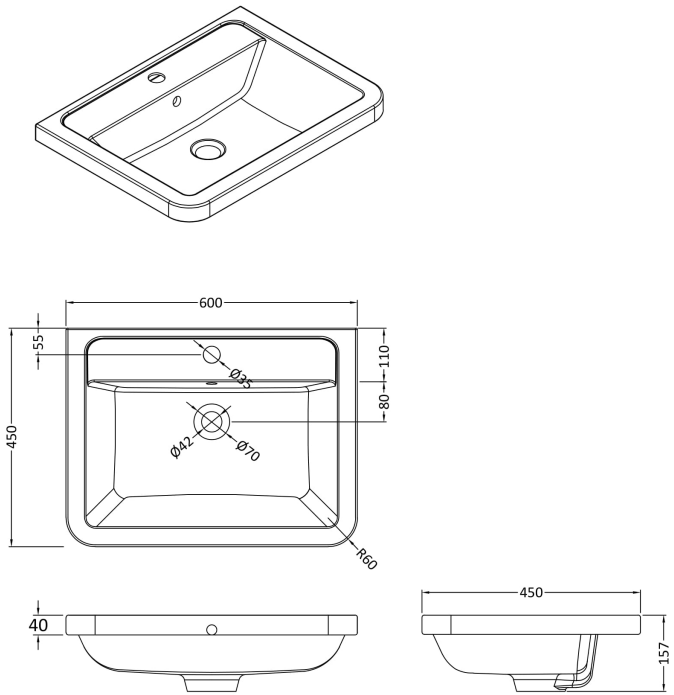

Product Dimensions	
Height (mm):	450
Width (mm):	600
Depth (mm):	157
Nett Weight (kg):	12.82
Packaging Dimensions	
Height (mm):	470
Width (mm):	640
Depth (mm):	167
Gross Weight (kg):	12.82
Packaging Data	
Box Colour:	Brown Cardboard Box - Printed
Box Qty:	1
Label Size:	100 x 50
Label Colour:	White Label
Label Qty:	2
Outer Box Dimensions (If Applicable)	
Height (mm):	
Width (mm):	
Depth (mm):	
Gross Weight (kg):	
Barcode:	5056211875789
Product Details	
Country of Origin:	China
Fitting Instruction:	No
Certification: CE & UKCA: No	WRAS: N/A WRAS No: N/A
Product Material:	Vitreous China
Fixing Supplied:	No

Pans/Bidets:	Trap Style: Not Applicable	Includes Seat: Not Applicable
Seats:	Seat Type: Not Applicable	Material: Not Applicable
	Function: Not Applicable	Hinge Type: Not Applicable
	Hinge Material: Not Applicable	
Cisterns:	Operating Type: Not Applicable	Fittings: Not Applicable
	Lever Type: Not Applicable	
Basins:	Tap Hole: One Taphole	Chain Stay Hole: No
	Template: Not Required	Waste Type Req: Slotted
	Overflow Inc: Yes	Overflow Cover: Yes
	Inner Bowl Depth (mm): 110mm	

Sales Code: PMP483

Description: 600 Wall Hung 2-Drawer Basin Unit

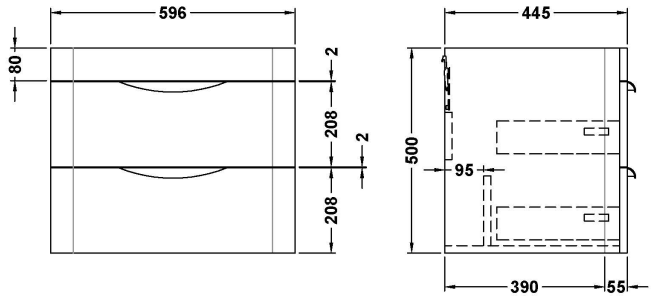

Product Dimensions	
Height (mm):	500
Width (mm):	596
Depth (mm):	445
Nett Weight (kg):	27
Packaging Dimensions	
Height (mm):	540
Width (mm):	640
Depth (mm):	480
Gross Weight (kg):	27
Packaging Data	
Box Colour:	Brown Cardboard Box - Printed
Box Qty:	1
Label Size:	100 x 50
Label Colour:	White Label
Label Qty:	2
Outer Box Dimensions (If Applicable)	
Height (mm):	
Width (mm):	
Depth (mm):	
Gross Weight (kg):	
Barcode:	5056211873464
Product Details	
Country of Origin:	China
Fitting Instruction:	No
CE & UKCA:	N/A
FSC Certified Materials:	Yes
Colour:	Gloss Grey Mist
Construction Method:	Cam & Wood Dowel
Construction Type:	Rigid
Cabinet Finish:	MFC Smooth Matt
Fascia Finish:	Mdf Painted Gloss
Cabinet Thickness (mm):	18
Fascia Thickness (mm):	18
Drawer Included:	Yes
Drawer Type:	80mm High Metal S/C Inc Galler
No of Shelves:	0
Hinge Type:	Not Applicable
Hinge Included:	No
Adjustable Legs:	No
Fixings Included:	Yes
Handle Style:	Contemporary
Waste Shroud:	Yes
Handle Included:	Yes
Handle Type:	Cup