Sales Code: KA306

Description: Eon Mono Sink Mixer With Swivel Spout

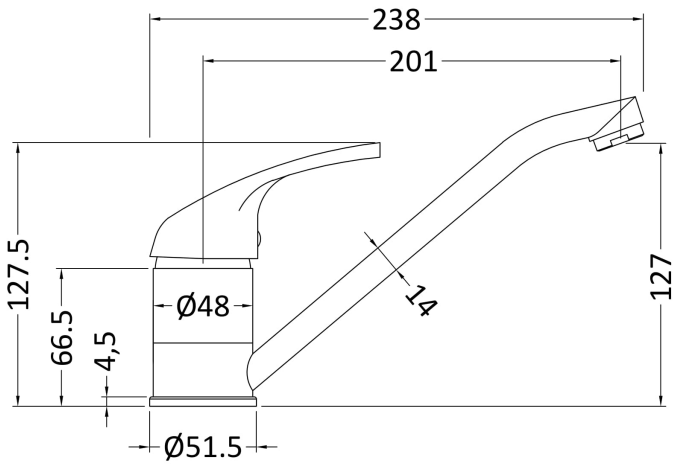

Product Dimensions	
Height (mm):	127
Width (mm):	52
Depth (mm):	227
Length (mm):	
Nett Weight (kg):	0.7
Packaging Dimensions	
Height (mm):	51
Width (mm):	251
Depth (mm):	108
Gross Weight (kg):	0.85
Packaging Data	
Box Colour:	White Cardboard Box
Box Qty:	1
Label Size:	100 x 50
Label Colour:	White Label
Label Qty:	2
Outer Box Dimensions (If Applicable)	
Height (mm):	275
Width (mm):	310
Depth (mm):	345
Length (mm):	
Gross Weight (kg):	11
Barcode:	5055146106258
Product Details	
Country of Origin:	China
Fitting Instruction:	No
Product Material:	Brass
Control Type:	Manual
Waste Included:	Waste Not Included
Waste Type:	Not Applicable
WRAS Approval: No	Approval No: N/A
Valve/Cartridge Type:	Single Lever Cartridge
Colour/Finish:	Chrome
Mount Type:	Deck
Operating Pressure (bar):	0.1
Flow Rates: (Litres Per Min) 0.1 bar: 2	0.5 bar: 6 1 bar: 10 2 bar: 13 3 bar: 16
Pipe Size:	15 mm (1/2" Bsp)
Pipe Centres:	N/A