Sales Code: OLF113

Description: 600 Single Door Mirror Unit

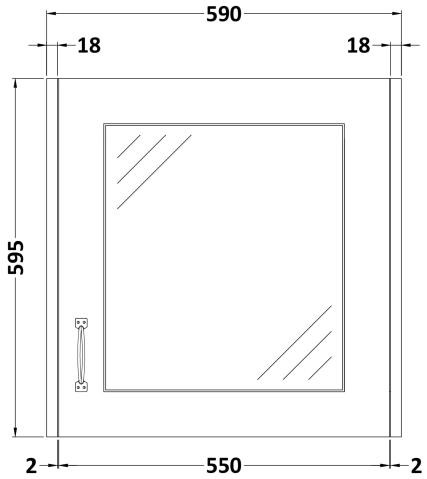

Product Dimensions	
Height (mm):	595
Width (mm):	590
Depth (mm):	162
Nett Weight (kg):	14.7
Packaging Dimensions	
Height (mm):	190
Width (mm):	610
Depth (mm):	625
Gross Weight (kg):	15
Packaging Data	
Box Colour:	Brown Cardboard Box
Box Qty:	1
Label Size:	100 x 50
Label Colour:	White Label
Label Qty:	2
Outer Box Dimensions (If Applicable)	
Height (mm):	
Width (mm):	
Depth (mm):	
Gross Weight (kg):	
Barcode:	5055275812860
Product Details	
Country of Origin:	United Kingdom
Fitting Instruction:	No
CE & UKCA:	Yes
FSC Certified Materials:	Yes
Colour:	White Ash
Construction Method:	Cam & Wood Dowel
Construction Type:	Rigid
Cabinet Finish:	MFC Textured Woodgrain
Fascia Finish:	Mdf Vinyl Textured Woodgrain
Cabinet Thickness (mm):	18
Fascia Thickness (mm):	18
Drawer Included:	No
Drawer Type:	Not Applicable
No of Shelves:	1
Hinge Type:	110 Degree Inset Clip-On S/C
Hinge Included:	Yes
Adjustable Legs:	No
Fixings Included:	No
Handle Style:	Traditional
Waste Shroud:	No
Handle Included:	Yes
Handle Type:	Strap