TECHNICAL DATA SHEET

ROXOR

Sales Code: PAL117

Description: 600 Fs 2-Door Vanity & Polymarble Basin

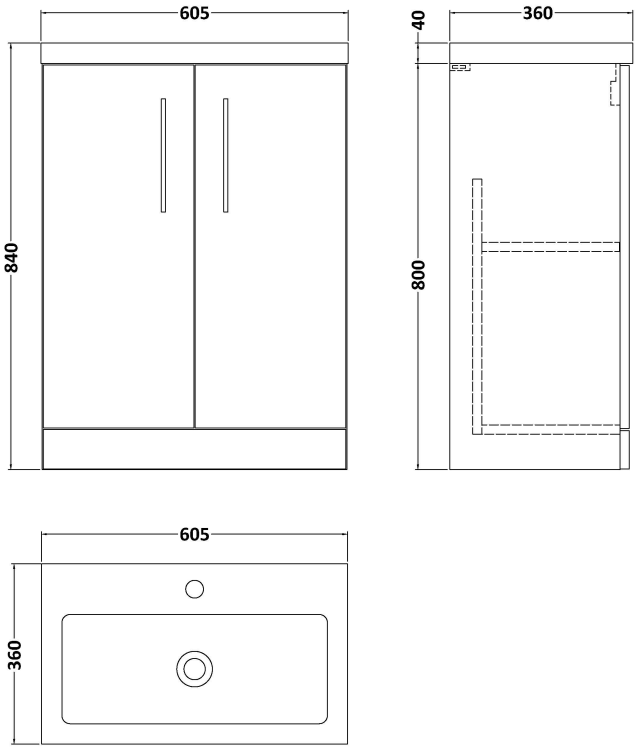

Packaging Details

Barcode: 5056462679389

Sales Code: NVF1303

Description: 600 Fs 2-Door Unit (335 Deep)

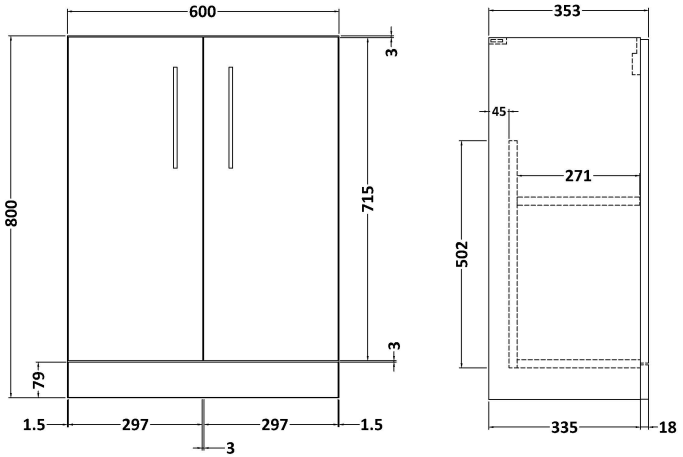

Product Dimensions	
Height (mm):	800
Width (mm):	600
Depth (mm):	353
Nett Weight (kg):	19.5
Packaging Dimensions	
Height (mm):	835
Width (mm):	620
Depth (mm):	375
Gross Weight (kg):	20
Packaging Data	
Box Colour:	Brown Cardboard Box - Printed
Box Qty:	0
Label Size:	0 x 0
Label Colour:	Not Applicable
Label Qty:	0
Outer Box Dimensions (If Applicable)	
Height (mm):	
Width (mm):	
Depth (mm):	
Gross Weight (kg):	
Barcode:	5056462659930
Product Details	
Country of Origin:	China
Fitting Instruction:	No
CE & UKCA:	N/A
FSC Certified Materials:	Yes
Colour:	Gloss Mid Grey
Construction Method:	Cam & Wood Dowel
Construction Type:	Rigid
Cabinet Finish:	MFC Painted Gloss
Fascia Finish:	Mdf Painted Gloss
Cabinet Thickness (mm):	16
Fascia Thickness (mm):	16
Drawer Included:	No
Drawer Type:	Not Applicable
No of Shelves:	1
Hinge Type:	95 Degree Soft Close
Hinge Included:	Yes, Supplied
Adjustable Legs:	No, Not Required
Fixings Included:	Yes
Handle Style:	Contemporary
Waste Shroud:	No
Handle Included:	Yes, Supplied
Handle Type:	D-Shape

Sales Code: PMB313

Description: 600 Rear Tap Basin 1Th

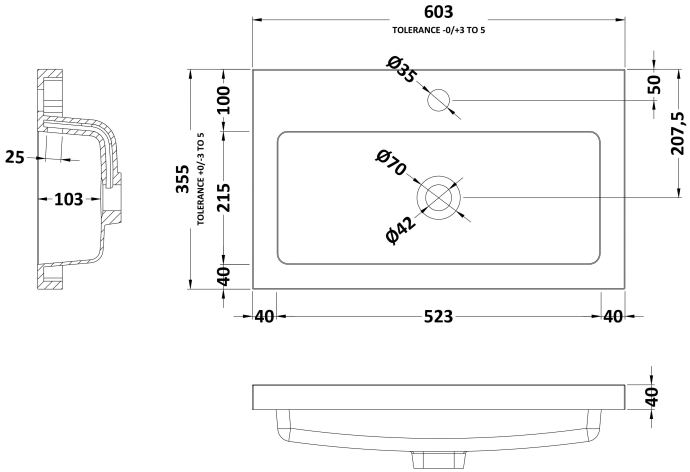

Product Dimensions	
Height (mm):	355
Width (mm):	603
Depth (mm):	135
Nett Weight (kg):	9.66
Packaging Dimensions	
Height (mm):	410
Width (mm):	200
Depth (mm):	650
Gross Weight (kg):	9.66
Packaging Data	
Box Colour:	Brown Cardboard Box - Printed
Box Qty:	1
Label Size:	100 x 50
Label Colour:	White Label
Label Qty:	2
Outer Box Dimensions (If Applicable)	
Height (mm):	
Width (mm):	
Depth (mm):	
Gross Weight (kg):	
Barcode:	5055369071982
Product Details	
Country of Origin:	China
Fitting Instruction:	No
Certification: CE & UKCA: Yes	WRAS: N/A WRAS No: N/A
Product Material:	Polymarble
Fixing Supplied:	No

Pans/Bidets:	Trap Style: Not Applicable	Includes Seat: Not Applicable
Seats:	Seat Type: Not Applicable	Material: Not Applicable
	Function: Not Applicable	Hinge Type: Not Applicable
	Hinge Material: Not Applicable	
Cisterns:	Operating Type: Not Applicable	Fittings: Not Applicable
	Lever Type: Not Applicable	
Basins:	Tap Hole: One Taphole	Chain Stay Hole: No
	Template: Not Required	Waste Type Req: Slotted
	Overflow Inc: Yes	Overflow Cover: Yes
	Inner Bowl Depth (mm): 103mm	