TECHNICAL DATA SHEET

ROXOR

Sales Code: PAR104

Description: 800 W/H 2-Drawer Unit & Basin

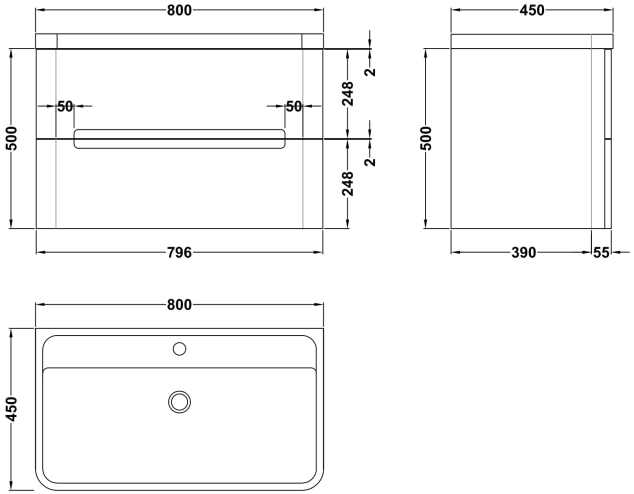

Packaging Details

Barcode: 5056211892908

Sales Code: PAR195

Description: 800 W/H 2-Drawer Unit

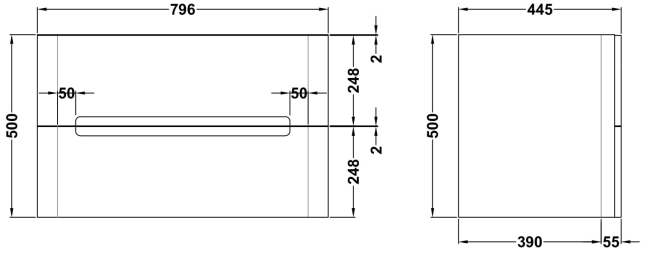

Product Dimensions	
Height (mm):	500
Width (mm):	796
Depth (mm):	445
Nett Weight (kg):	31.5
Packaging Dimensions	
Height (mm):	540
Width (mm):	840
Depth (mm):	480
Gross Weight (kg):	32
Packaging Data	
Box Colour:	Brown Cardboard Box - Printed
Box Qty:	1
Label Size:	100 x 50
Label Colour:	White Label
Label Qty:	2
Outer Box Dimensions (If Applicable)	
Height (mm):	
Width (mm):	
Depth (mm):	
Gross Weight (kg):	
Barcode:	5056211888031
Product Details	
Country of Origin:	China
Fitting Instruction:	No
CE & UKCA:	N/A
FSC Certified Materials:	Yes
Colour:	Satin White
Construction Method:	Cam & Wood Dowel
Construction Type:	Rigid
Cabinet Finish:	MFC Painted Matt
Fascia Finish:	Mdf Painted Matt
Cabinet Thickness (mm):	18
Fascia Thickness (mm):	18
Drawer Included:	Yes
Drawer Type:	80mm High Metal S/C Inc Galler
No of Shelves:	0
Hinge Type:	Not Applicable
Hinge Included:	Not Applicable
Adjustable Legs:	No
Fixings Included:	Yes
Handle Style:	Contemporary
Waste Shroud:	Yes
Handle Included:	Yes
Handle Type:	Inset

Sales Code: PMB005

Description: 800X450mm Poly Marble Basin

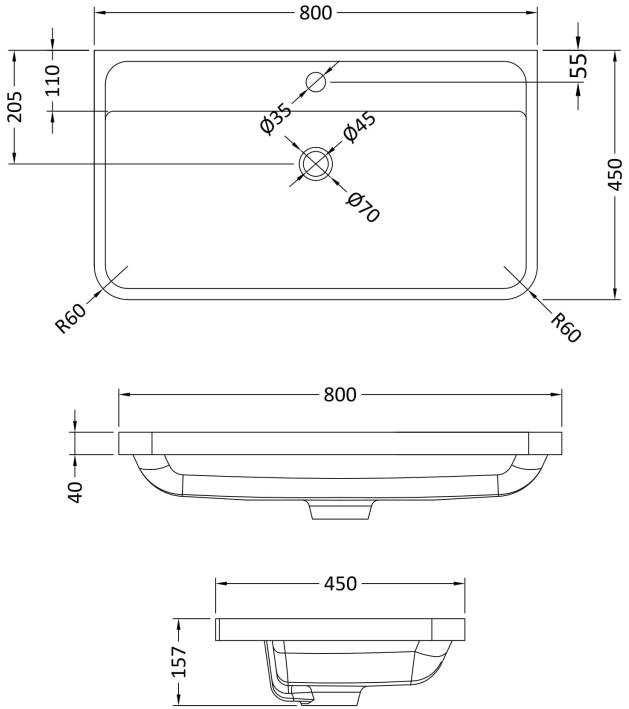

Product Dimensions	
Height (mm):	450
Width (mm):	800
Depth (mm):	157
Nett Weight (kg):	18.12
Packaging Dimensions	
Height (mm):	167
Width (mm):	840
Depth (mm):	470
Gross Weight (kg):	18.12
Packaging Data	
Box Colour:	Brown Cardboard Box - Printed
Box Qty:	1
Label Size:	100 x 50
Label Colour:	White Label
Label Qty:	2
Outer Box Dimensions (If Applicable)	
Height (mm):	
Width (mm):	
Depth (mm):	
Gross Weight (kg):	
Barcode:	5055369021765
Product Details	
Country of Origin:	China
Fitting Instruction:	No
Certification: CE & UKCA: No	WRAS: N/A WRAS No: N/A
Product Material:	Polymarble
Fixing Supplied:	No

Pans/Bidets:	Trap Style: Not Applicable	Includes Seat: Not Applicable
Seats:	Seat Type: Not Applicable	Material: Not Applicable
	Function: Not Applicable	Hinge Type: Not Applicable
	Hinge Material: Not Applicable	
Cisterns:	Operating Type: Not Applicable	Fittings: Not Applicable
	Lever Type: Not Applicable	
Basins:	Tap Hole: One Taphole	Chain Stay Hole: No
	Template: Not Required	Waste Type Req: Slotted
	Overflow Inc: Yes	Overflow Cover: Yes
	Inner Bowl Depth (mm): 105mm	