Sales Code: TR71103

Description: Offset Tray Lh 900 X 800

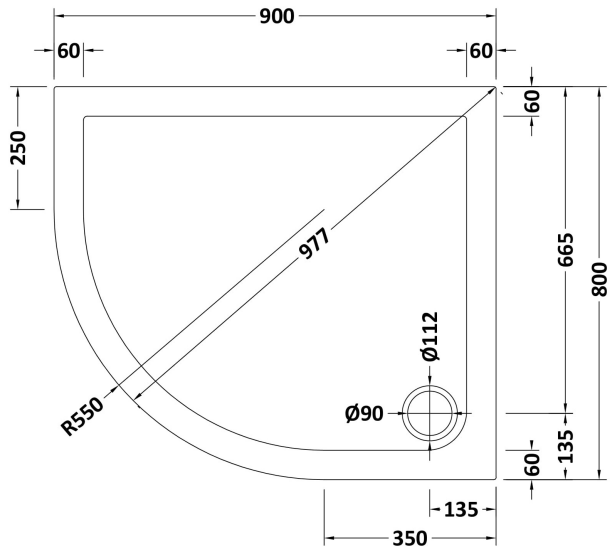

Product Dimensions	
Length (mm):	900
Width (mm):	800
Height (mm):	40
Nett Weight (kg):	23.4
Packaging Dimensions	
Length (mm):	940
Width (mm):	840
Height (mm):	85
Gross Weight (kg):	23.7
Packaging Data	
Box Colour:	Shrinkwrap & Polystyrene
Box Qty:	1
Label Size:	100 x 50
Label Colour:	White Label
Label Qty:	2
Outer Box Dimensions (If Applicable)	
Length (mm):	
Width (mm):	
Height (mm):	
Gross Weight (kg):	
Barcode:	5056211813392
Product Details	
Country of Origin:	United Kingdom
Fitting Instruction:	No
CE & UKCA:	Yes
Colour/Finish:	Slate Grey
Product Material:	Acrylic Capped ABS Caco3 & Pu
Material Colour Reference:	Slate Grey
Radius:	550
Waste Required (mm):	90
Compatible with Leg Kit:	Yes