TECHNICAL DATA SHEET

ROXOR

Sales Code: VTM650

Description: Mayford 650mm Basin & Cabinet

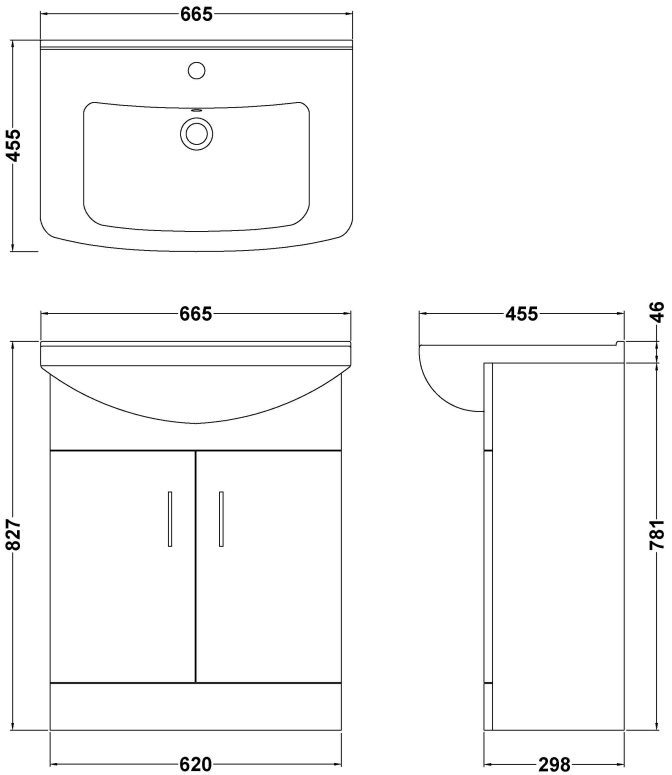

Packaging Details

Barcode: 5055369071067

Sales Code: NBC103

Description: 650 Deluxe Basin 1Th (300 Deep)

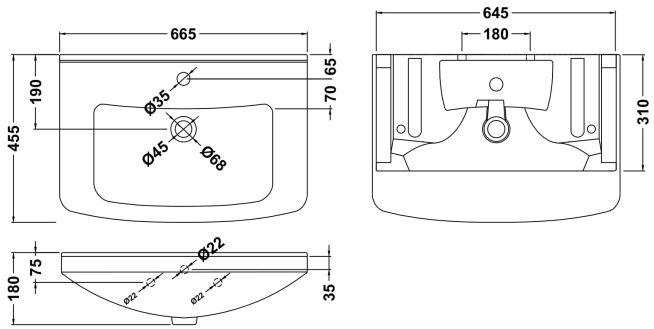

Product Dimensions	
Height (mm):	180
Width (mm):	650
Depth (mm):	450
Nett Weight (kg):	17.5
Packaging Dimensions	
Height (mm):	490
Width (mm):	190
Depth (mm):	690
Gross Weight (kg):	17.5
Packaging Data	
Box Colour:	Brown Cardboard Box - Printed
Box Qty:	1
Label Size:	100 x 50
Label Colour:	Not Applicable
Label Qty:	0
Outer Box Dimensions (If Applicable)	
Height (mm):	
Width (mm):	
Depth (mm):	
Gross Weight (kg):	
Barcode:	5055369054190
Product Details	
Country of Origin:	China
Fitting Instruction:	No
Certification: CE & UKCA: No	WRAS: N/A WRAS No: N/A
Product Material:	Vitreous China
Fixing Supplied:	No

Pans/Bidets: Trap Style: Not Applicable Includes Seat: Not Applicable

Seats: Seat Type: Not Applicable Material: Not Applicable
Function: Not Applicable Hinge Type: Not Applicable
Hinge Material: Not Applicable

Cisterns: Operating Type: Not Applicable Fittings: Not Applicable
Lever Type: Not Applicable

Basins: Tap Hole: One Taphole Chain Stay Hole: No
Template: Not Required Waste Type Req: Slotted
Overflow Inc: Yes Overflow Cover: Yes
Inner Bowl Depth (mm): 115mm

Sales Code: PRC103

Description: 650 Pr Std Basin Unit

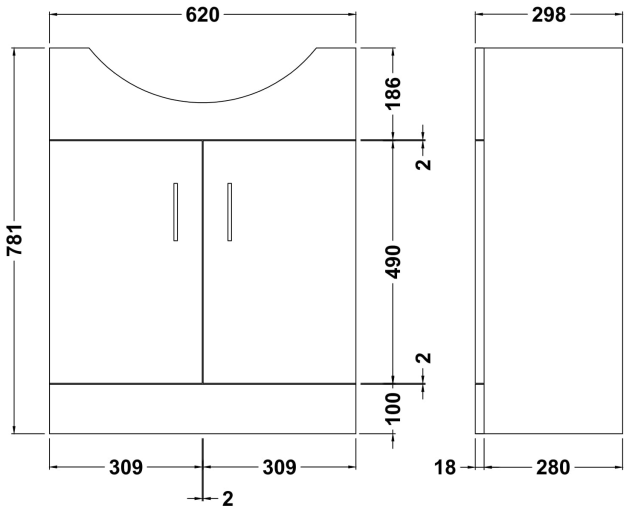

Product Dimensions	
Height (mm):	781
Width (mm):	620
Depth (mm):	298
Nett Weight (kg):	19.5
Packaging Dimensions	
Height (mm):	325
Width (mm):	645
Depth (mm):	815
Gross Weight (kg):	19.5
Packaging Data	
Box Colour:	Brown Cardboard Box - Printed
Box Qty:	1
Label Size:	100 x 50
Label Colour:	Not Applicable
Label Qty:	0
Outer Box Dimensions (If Applicable)	
Height (mm):	
Width (mm):	
Depth (mm):	
Gross Weight (kg):	
Barcode:	5055369058334
Product Details	
Country of Origin:	China
Fitting Instruction:	No
CE & UKCA:	N/A
FSC Certified Materials:	Yes
Colour:	Gloss White
Construction Method:	Cam & Wood Dowel
Construction Type:	Rigid
Cabinet Finish:	MFC Painted Gloss
Fascia Finish:	Mdf Painted Gloss
Cabinet Thickness (mm):	16
Fascia Thickness (mm):	18
Drawer Included:	No
Drawer Type:	Not Applicable
No of Shelves:	1
Hinge Type:	95 Degree Clip-On Soft Close
Hinge Included:	Yes
Adjustable Legs:	No
Fixings Included:	No
Handle Style:	Modern
Waste Shroud:	No
Handle Included:	Yes
Handle Type:	D-Shape